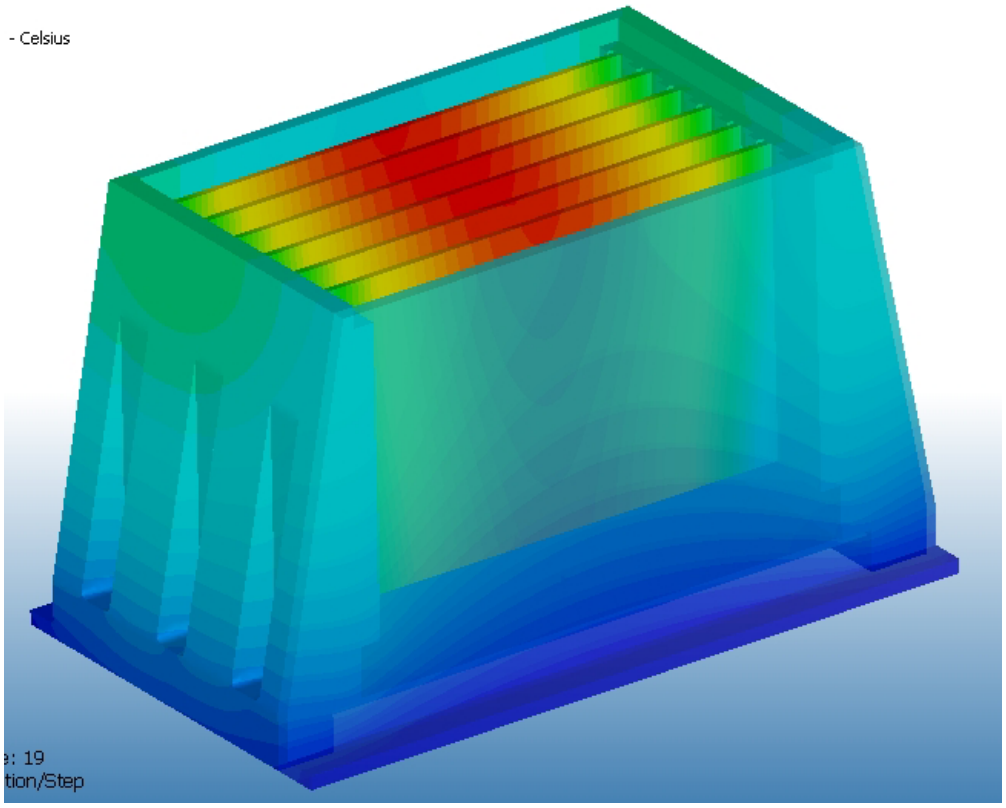

VXS 6U Chassis Thermal Analysis Report

***Prepared for*: Tom Johnson, Lead Engineer, STORRM Program**

***Prepared By*: John Randazzo, NOVA Integration Solutions**

***Date Prepared:* June 22, 2009**

Executive Overview

Nova Integration Solutions executed a conduction-only thermal analysis of a proposed design for the VXS 6U Chassis project. This goal of the analysis was to quantify the steady state temperatures resulting on the circuit boards under a constant evenly-distributed 40 Watt thermal load on each card. The imposed limitation of the results was that card edge temperatures should not exceed 70°C.

The following report describes the assumptions governing the analysis, and how the problem was modeled using CF Design as the thermal analysis tool. It is followed by a presentation of the results of the analysis and concludes with an examination and interpretation of those results and how they compare to the critical requirements.

Assumptions

The assumptions made in the setup and running of the analysis were as follows:

1. Time Dependence and Overall Analysis Approach
    - Analysis to be run as conduction-only
    - Analysis to be run as steady-state
2. Thermal Loads
    - Each circuit card to receive a uniform 40W load
3. Materials
    - Chassis parts to be made from MIC-6
    - Cards to be held in place using Calmark Series 260 “wedge-lok” retainers
    - Bergquist Q-Pad II to be used at interface between chassis and cold plate
    - Cold plate and board stiffeners to be made from AL6061-T651
4. Pass/Fail Criteria
    - Edge temperatures of circuit boards not to exceed 70°C

Model Setup

This section denotes how the assumptions listed above were translated into boundary conditions and the material properties utilized in the analysis software. The software used for the analysis was CF Design from Blue Ridge Numerics of Charlottesville, VA, a FEA-based CFD code.

The boundary conditions used are denoted in Figure 1. First, each of the boards received a total heat generation load of 40 Watts. This condition takes and distributes the head load uniformity over the entire part. Next there is a heat flux surface boundary condition of 12.5 Btu/in^2/hr., a number provided by NASA’s mechanical engineering team, and given as the heat flux from the thermal pad into the cold plate and subsequent orbiter structure. This is

NOVA *Integration Solutions* | 19 East 17th Street, Saint Cloud, FL 34769 | Ph (407) 556-3934 | www.novaintegration.com

applied to the bottom of the chassis where it meets the cold plate, which will later be designated to have the equivalent material properties of the QPad II. A reference temperature of 120°F is also applied to these surfaces, provided by Mark as the average surface temperature of the cold plate. The lack of boundary surfaces on any other surfaces designates these to be adiabatic insulated) surfaces, or surfaces where no heat transfer will occur.

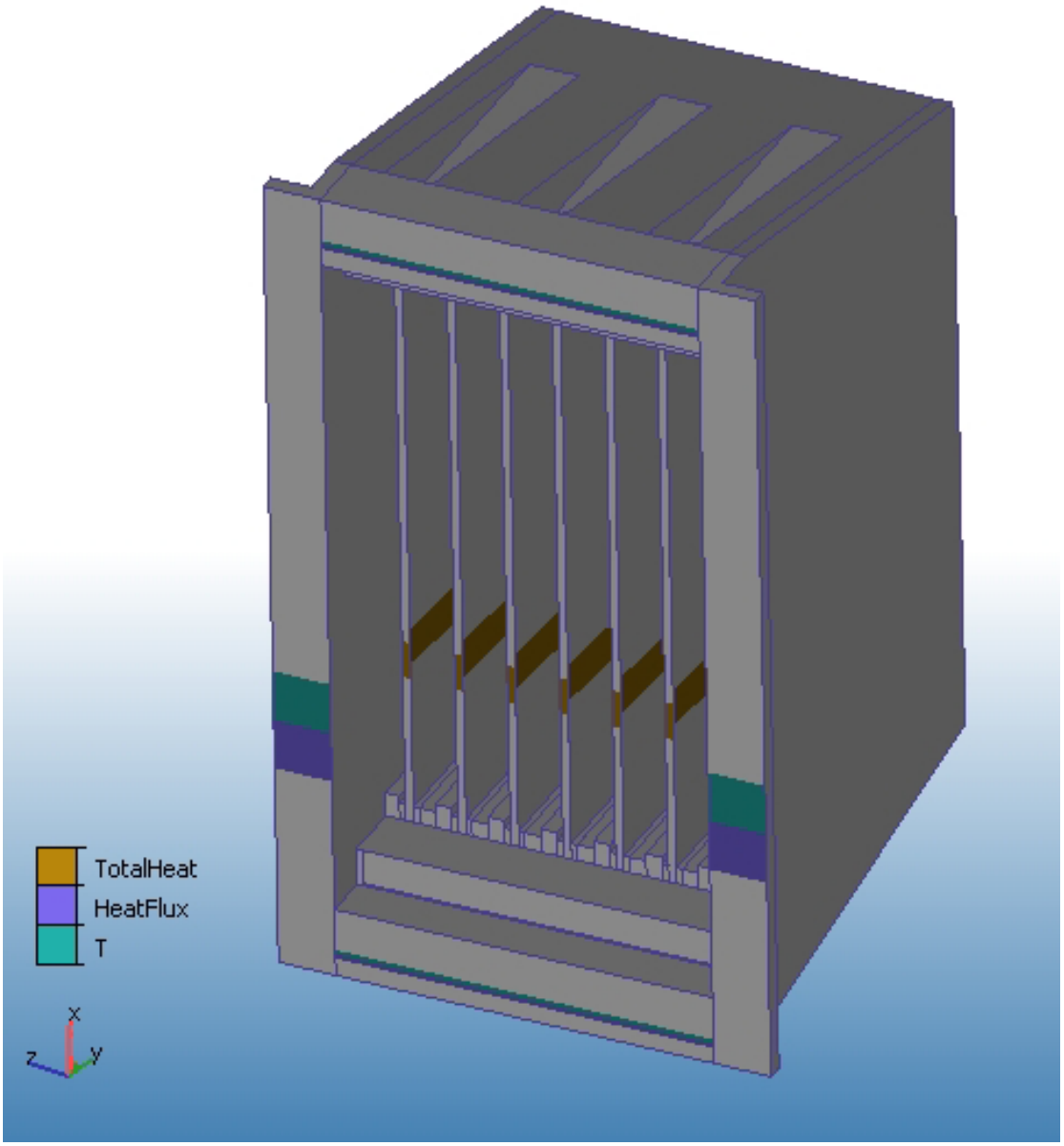

Figure 1: VXS Chassis Boundary Conditions

The materials setup in the analysis is denoted in Figure 2. The chassis walls were set as MIC-6 casting alloy. The boards were set up with a stock 12 layer circuit board material contained within CF Design. Each board is

***NOVA** Integration Solutions* | 19 East 17th Street, Saint Cloud, FL 34769 | Ph (407) 556-3934 | www.novaintegration.com

straddled on either side by an aluminum stiffener. The stiffeners and wedge locks were set up as AL 6061-T651. The applicable material properties for these are shown for reference purposes in Table 1.

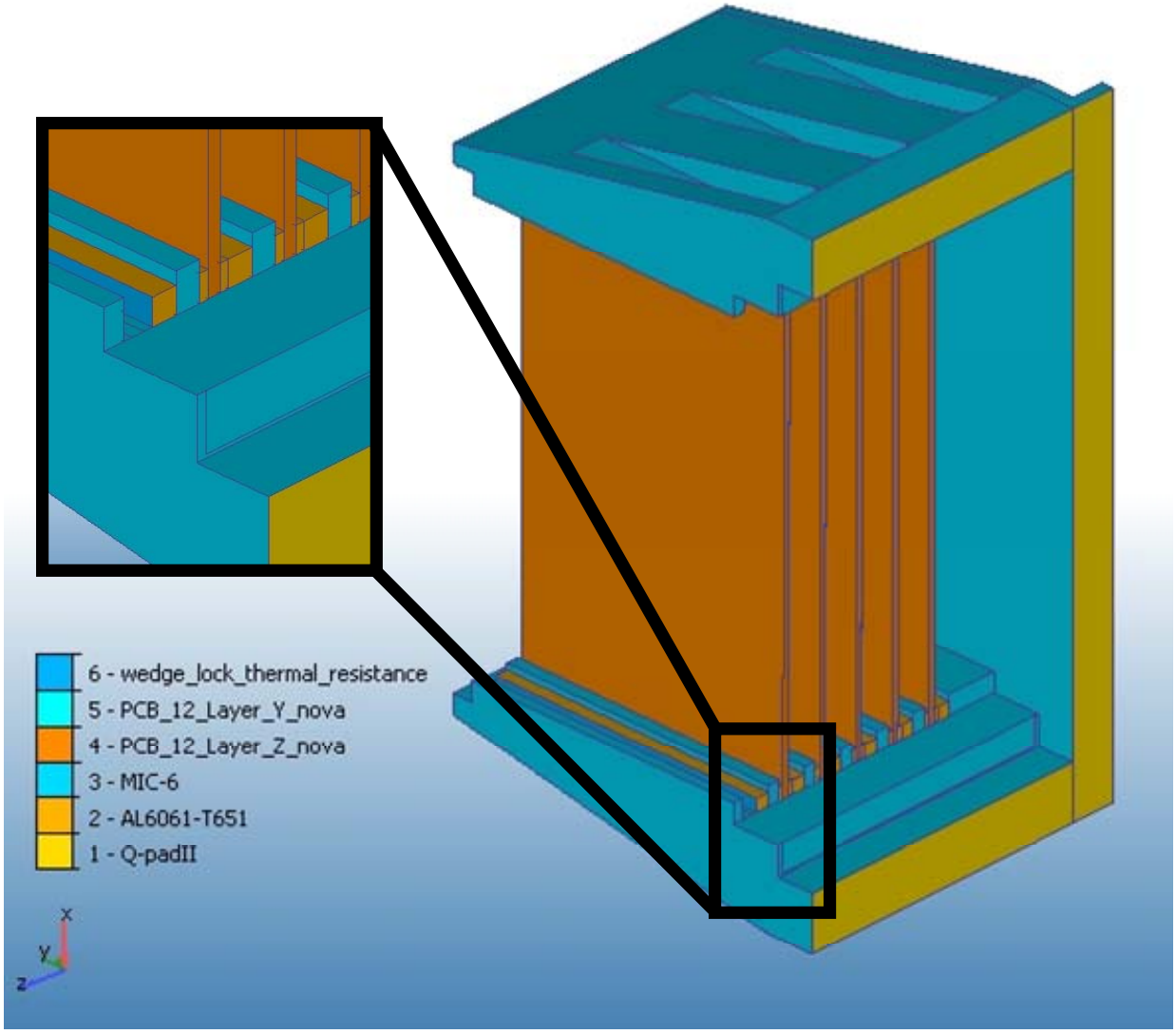

Figure 2

The other materials utilized in the analysis were specialized types available in CF Design. They were used to simulate the thermal resistance of the wedge lock interface and the Q-Pad to cold plate interface.

The wedge lock contact surfaces was modeled using a surface part, which is a method typically used to represent thin films, coatings, or sheetmetal parts without having to model and mesh the resulting thin geometry. In the case of the wedge lock the thermal resistance is simulated by choosing an arbitrary film thickness, and modifying the thermal conductivity of the applied material to meet the requirements of the equation

$$L/k = R * A,$$

where **L** is the film thickness, **k** is the thermal conductivity, **R** is the thermal resistance, and **A** is the surface area of the interface. In the case of the wedge locks, a value of .03 inches was chosen for the thickness, dimensions of 5.5

***NOVA** Integration Solutions* | 19 East 17th Street, Saint Cloud, FL 34769 | Ph (407) 556-3934 | www.novaintegration.com

inches and .26 inches were used for the rectangular area calculation, and a value of 0.262°C/W was obtained from Figure 3 and used as the thermal resistance.

Choosing this value was also arbitrary. According to information on the Calmark website, their least efficient 3-piece wedge locks will perform on the 2°C*in/W curve and their most efficient 5-piece wedge locks will perform on the 4°C*in/W curve. An assumption was made that the series 260 was a moderately efficient 5-piece locking system. Based on its 11-inch total length per card, the value of 0.262°C was chosen.

Table 1: Material Property Comparison

Material Property	**MIC-6**	**AL 6061-T651**	**CF design PCB**
Density (kg/m^3)	2800	2700	432
*Specific Heat (J/kg*K)*	880	896	837
*Thermal Conductivity (W/m*k)*	142	167	85.6 planar, .33 normal

For the Q-Pad to cold plate interface, a thermal resistance material type was used. In this case, no material type had to be created nor did a pseudo thickness have to be assumed. The only requirement is to specify the resistance value. On the Q-Pad datasheet, this was identified as 0.35 K-in^2/W.

Of significant note is the absence of the cold plate. Though it was modeled in the CAD package, it was not necessary to include it in thermal model because its heat transfer was handled with the heat flux and prescribed temperature boundary conditions.

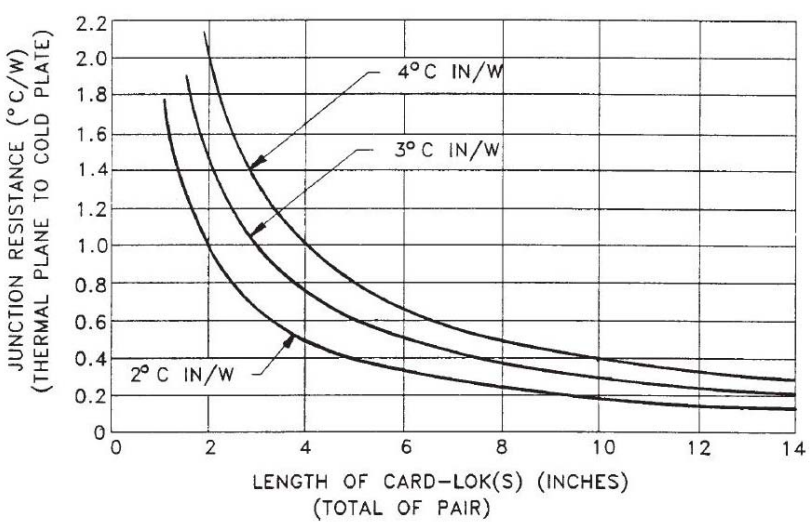

Figure 3: Wedge Lock Junction Resistance Chart

***NOVA** Integration Solutions* | 19 East 17th Street, Saint Cloud, FL 34769 | Ph (407) 556-3934 | www.novaintegration.com

Results

The main focus of this analysis was on the resulting temperatures, more specifically on the circuit card temperatures. The overall temperature distribution of the entire assembly is shown in Figure 4. As can be seen, the temperatures range from about 49°C to 70°C on the chassis, and upwards of 97°C in the middle of the circuit boards. The long walls of the chassis do not show as great an efficiency in transferring heat as in the short sides, with only the corners of the near side long wall showing temperatures rivaling the maximum temperatures of the short side walls. Figure 5 show the maximum, minimum and temperature distributions specifically on the third circuit board from the near side. This is the hottest circuit board of the assembly. It can be observed that the temperatures range from 60°C to 97°C. Subsequent Figures 6-9 show temperature plots at the corners of the circuit card. The last figure, Figure 10, shows all areas in the model that exceed the temperature limit of 70°C. As can be seen, there are no areas of the chassis itself that lie above that limit, and the areas that are above the temperature range do not include the card edges. Most of each of the circuit boards, however, does fall above 70°C.

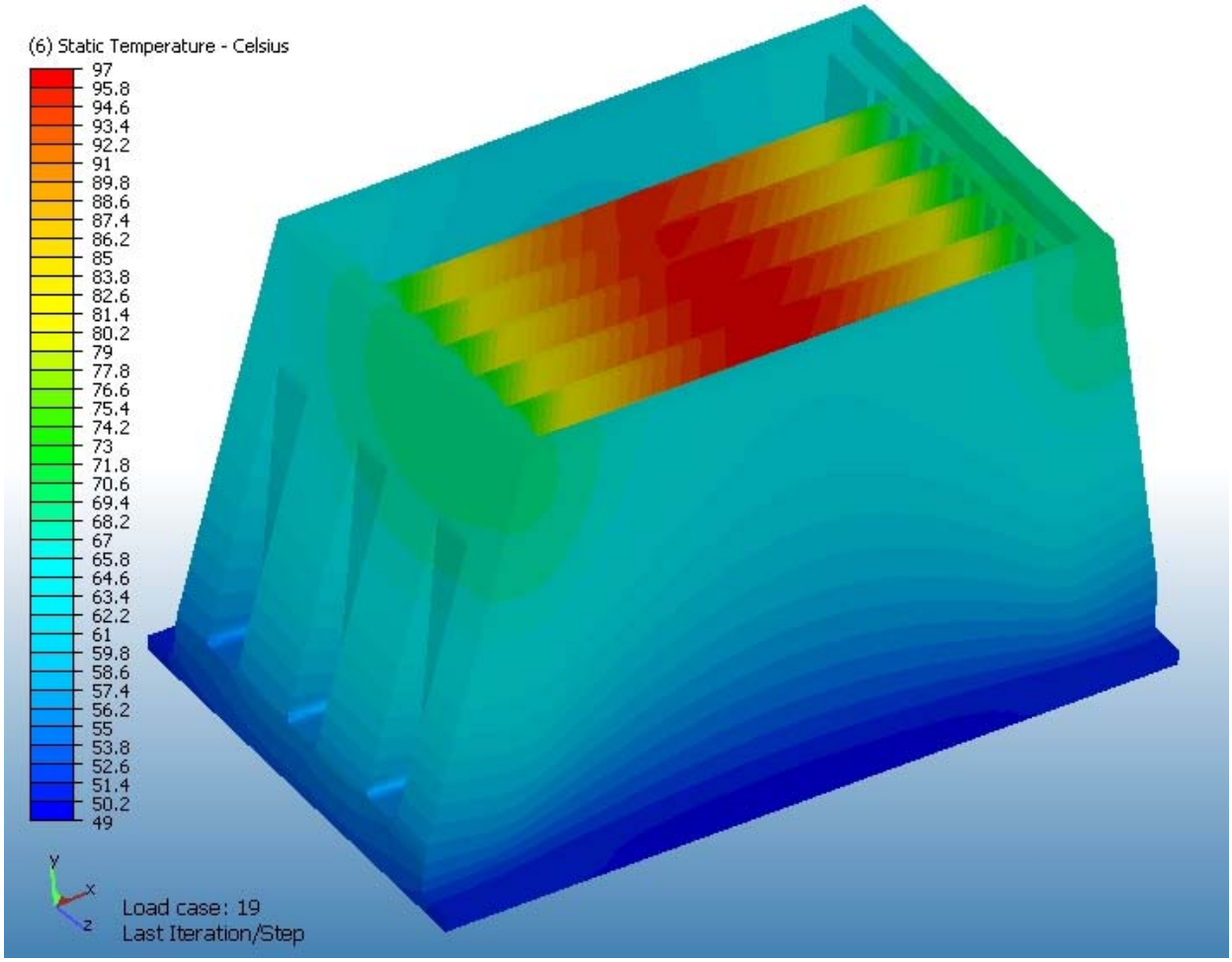

Figure 4: Overall Chassis Temperature Distribution

***NOVA** Integration Solutions* | 19 East 17th Street, Saint Cloud, FL 34769 | Ph (407) 556-3934 | www.novaintegration.com

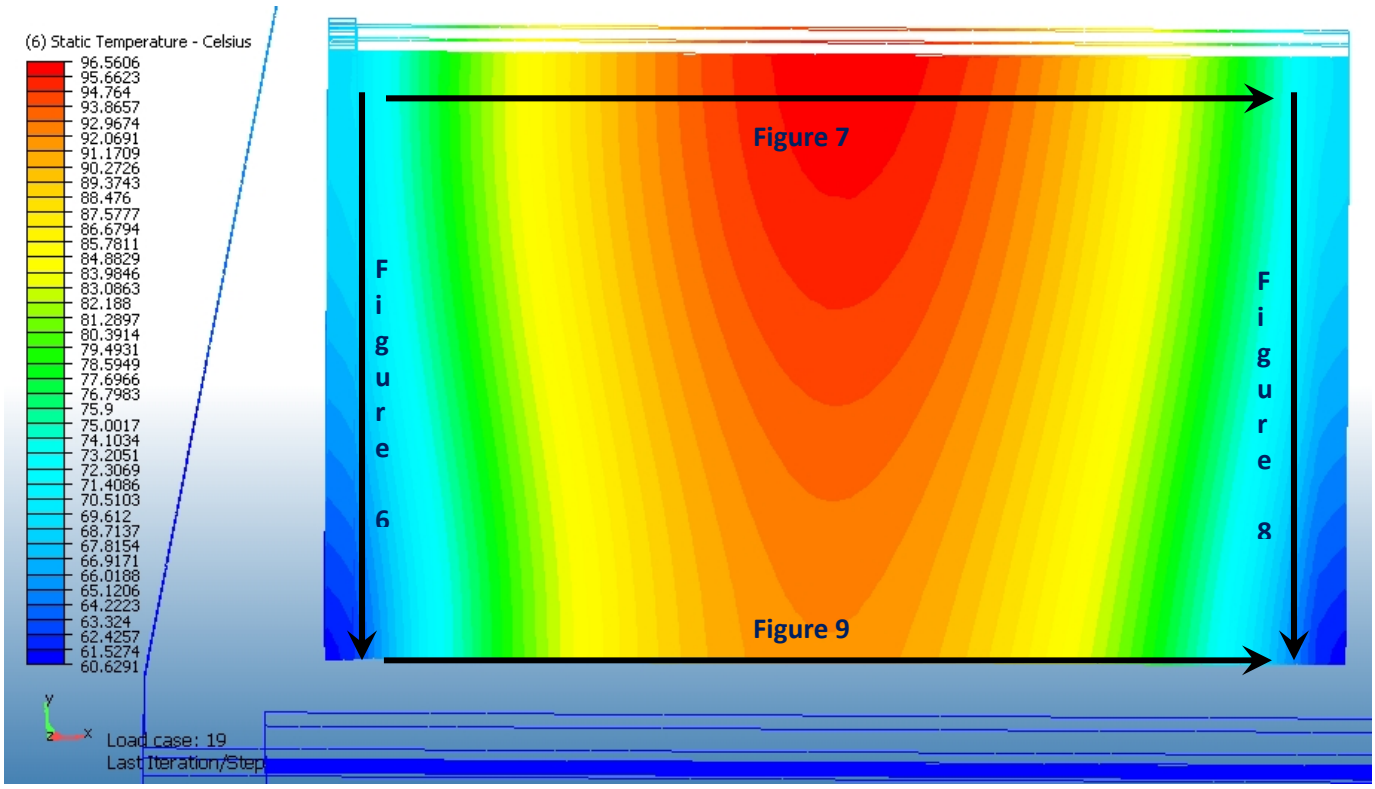

Figure 5: Third Circuit Card Temperature Distribution

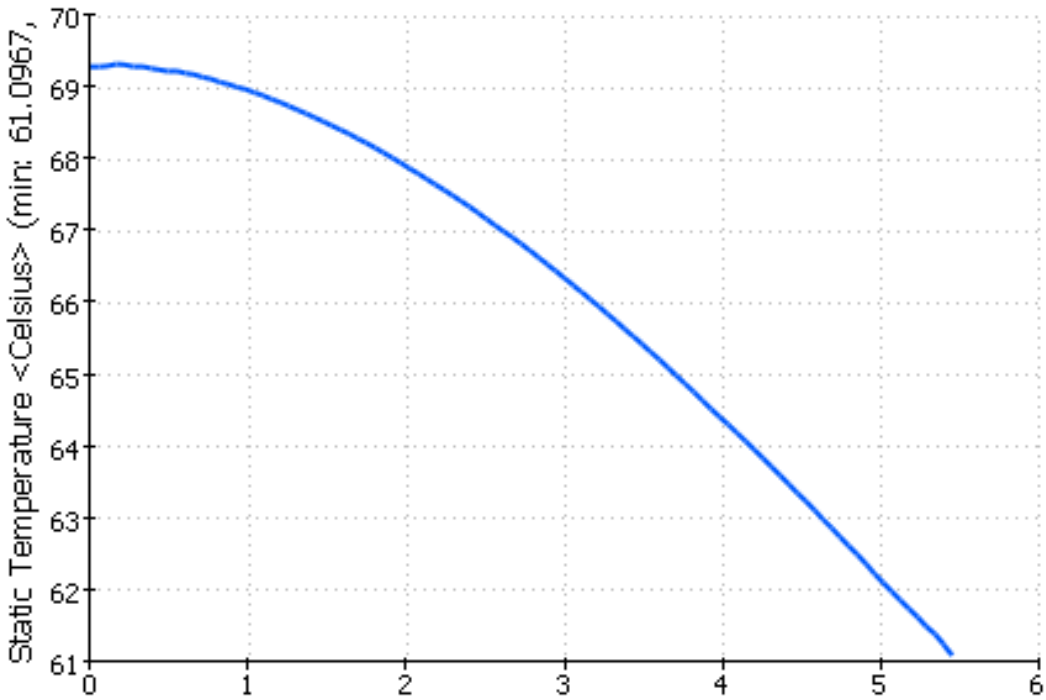

Figure 6: Left-Edge Circuit Board Temperature Distribution

***NOVA** Integration Solutions* | 19 East 17th Street, Saint Cloud, FL 34769 | Ph (407) 556-3934 | www.novaintegration.com

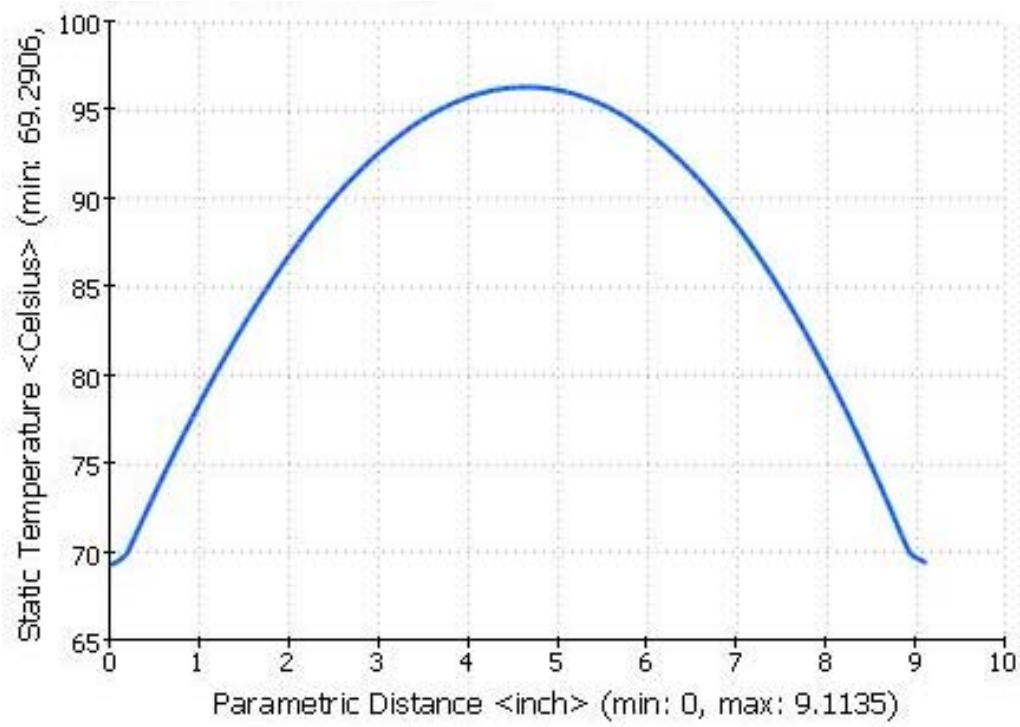

Figure 7: Top-Edge Circuit Board Temperature Distribution

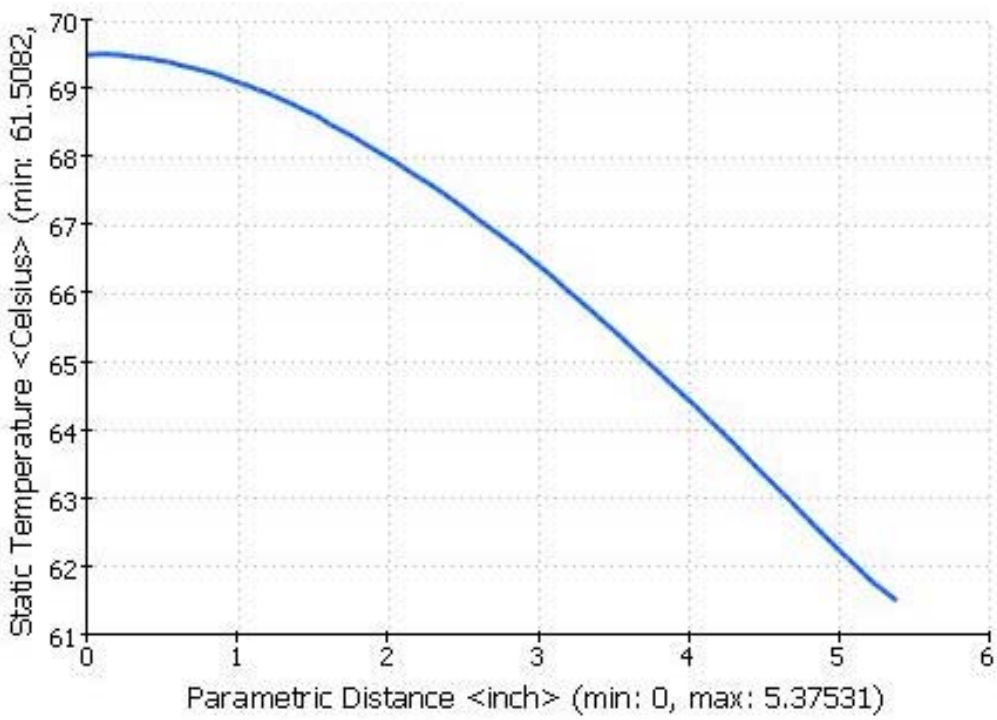

Figure 8: Right-Edge Circuit Board Temperature Distribution

***NOVA** Integration Solutions* | 19 East 17th Street, Saint Cloud, FL 34769 | Ph (407) 556-3934 | www.novaintegration.com

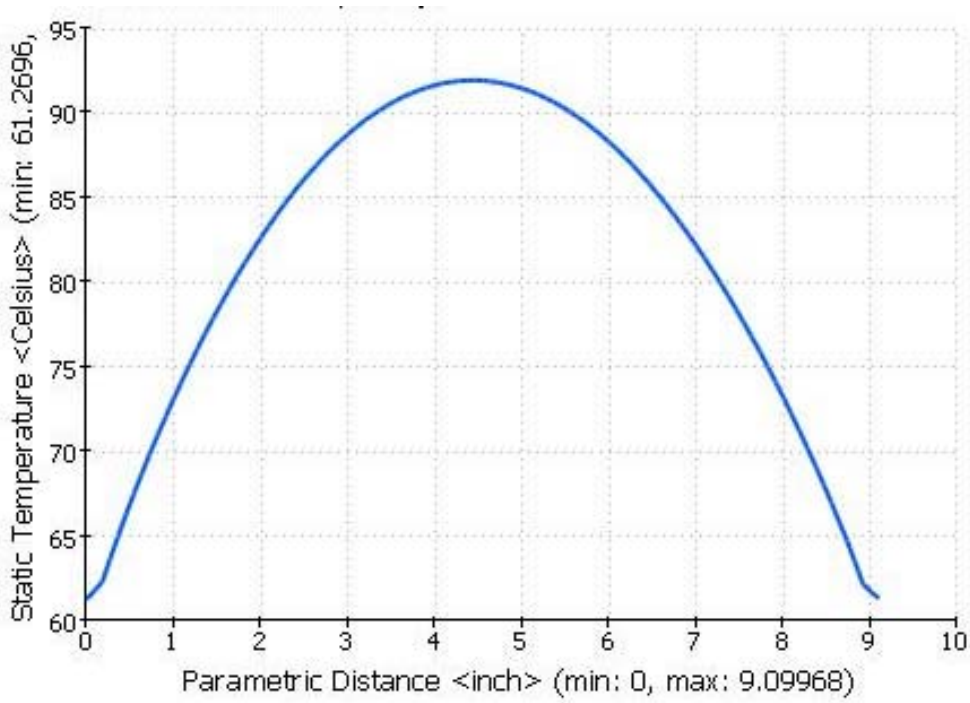

Figure 9: Bottom-Edge Circuit Board Temperature Distribution

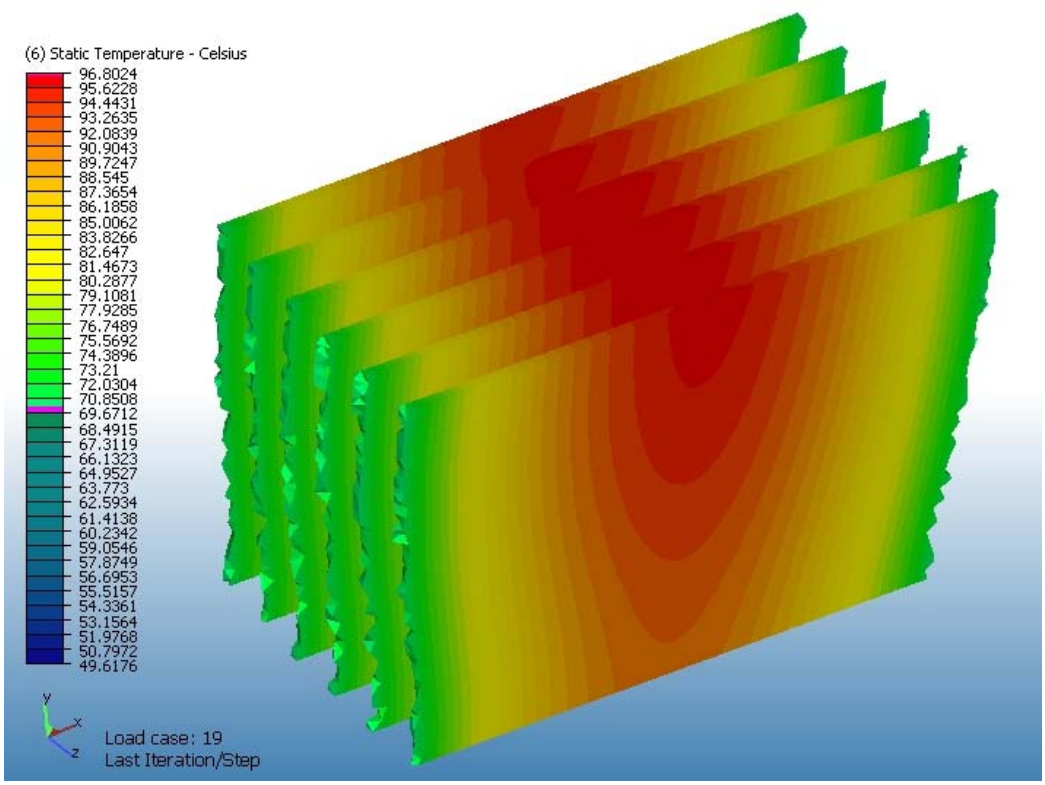

Figure 10: Model Areas Exceeding 70°C

***NOVA** Integration Solutions* | 19 East 17th Street, Saint Cloud, FL 34769 | Ph (407) 556-3934 | www.novaintegration.com

Conclusions

Based off the assumptions utilized in this thermal analysis and the temperature results presented, it appears that this design of the VXS Chassis will meet the 70°C max circuit card edge temperature requirement. There are other considerations, analysis omissions, and missing design information that further strengthens this claim. First, it is unclear whether the actual temperature requirement is 70°C or 75°C. In conversations with NASA engineering, it was indicated that the max allowed temperature is 75°C at the card edges. This issue should be thoroughly investigated, as under the relaxed requirements the current chassis design would have an even greater margin for difference in real world vs. simulation performance. There are two other factors omitted in the analysis that also would have contributed to differences in the circuit card and chassis temperatures. The first is the omission of radiation heat transfer in the simulation. Had radiation been included, the circuit card temperatures (particularly on the outer cards) would have had been lower, and the long walls of the chassis would have increased temperatures to indicate their greater participation in the system's heat transfer. The other factor lies in the design of the card itself. In researching the design of the Curtiss Wright card design, it is not unusual for the circuit cards to have additional metal ribs on the card whether for heat transfer of for structural reinforcement purposes. These effects of these are that the heat will be distributed more efficiently, as observed with the current ribs at the card edges.

Despite the issues discussed above, there is cause for concern on how the maximum expected temperatures will affect component performance. Once the details of the circuit cards emerge, a check should be made to ensure that any critical board components can withstand the expected elevated temperatures. An even better approach, however, would be to run another thermal analysis with more details of the structure, heat loads and placement of key components on the circuit boards. It may or may not be desirable to include radiation in subsequent analysis, depending on whether more reliable emissivity information for all materials involved can be obtained.

NOVA *Integration Solutions* | 19 East 17th Street, Saint Cloud, FL 34769 | Ph (407) 556-3934 | www.novaintegration.com